Advanced Fault-Tolerant Control for Switched Reluctance Motor Drives

McMaster Institute for Automotive Research and Technology (MacAUTO)
Electrical and Computer Engineering McMaster University
Peter Azer

EECOMOBILITY (ORF) & HEVPD&D CREATE

INTRODUCTION

- This Poster introduces a new fault-tolerant strategy for the asymmetrical half-bridge converter used in switched reluctance machine drives.
- The proposed method can work under multiple open-switch faults by bypassing the faulty part with the minimum number of switches.
- The proposed method characterizes by providing a complete tolerance at low speeds up to four open-switch faults.

DOUBLE SWITCH FAULTS

- At high speeds, phase '*b*' is excited (S_{R+} and T_{B+} are switched on) during the commutation of phase '*a*'. Thus, phase '*a*' voltage is turned zero as S_{A-} is off. When phase '*b*' reaches commutation, T_{A+} is switched off.
- At low speeds, phase '*b*' voltage is turned positive, during chopping of phase '*a*' current. Phase a voltage to be zero as a soft chopping. Thus, phase a current is almost the same like healthy conditions.

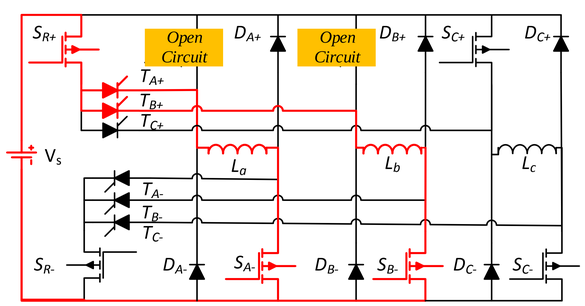

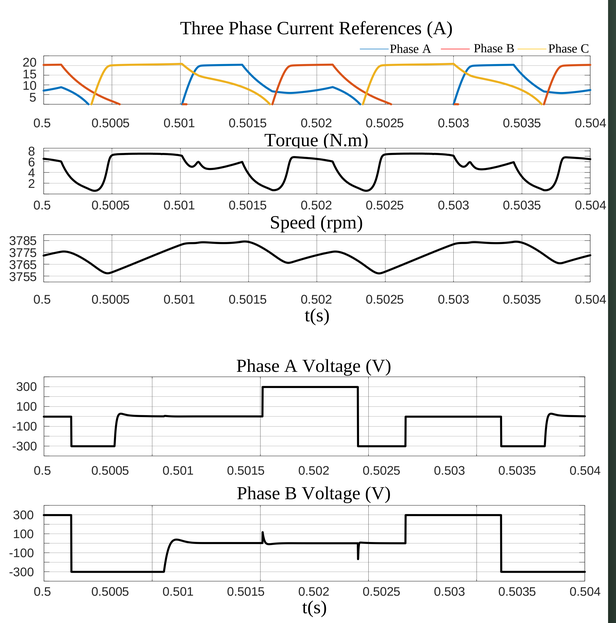

Item	High Speed	Low Speed
θ_{on_abc}	27	27.5
θ_{off_abc}	34.5	42
T_{avg} (N.m)	5	5
ΔT_{ripple} (%)	220	110
N_{rpm_ref}	4100	600
N_{rpm_real}	3080	597.5

OPERATING PRINCIPAL

- The proposed method has an additional two controlled switches and six thyristors are used.
- The upper switch SR+ and the three thyristors T_{A+}, T_{B+} and T_{C+} tolerate the upper switch faults.
- The lower switch S_{R-} and the three thyristors T_{A-}, T_{B-} and T_{C-} tolerate the lower switch faults.

ADVANTAGES

- Complete fault-tolerance at low speeds up to four open-switch faults.
- Reduced number of additional switches compared to other methods.
- Can work if all switches suffer from open-switch fault.

SEXTUPLE SWITCH FAULTS

- The three phases suffer from positive voltage instead of negative during chopping at low speeds and during commutation at high speeds which results in high currents.
- The conduction periods of the three phases are reduced to avoid the current increase.

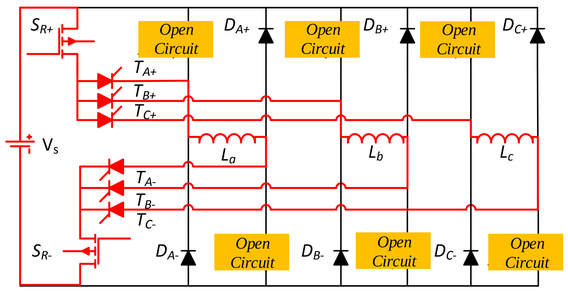

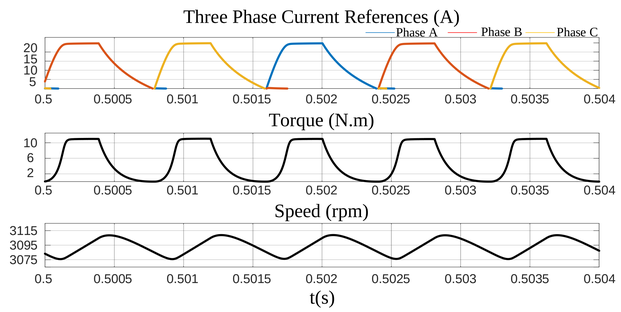

Item	High Speed	Low Speed
θ_{on_abc}	27	24
$\theta_{off\_a,b}$	37	44
θ_{off_c}	42	44
T_{avg} (N.m)	5	5
ΔT_{ripple} (%)	138	40
N_{rpm_ref}	4100	600
N_{rpm_real}	3754	597.5

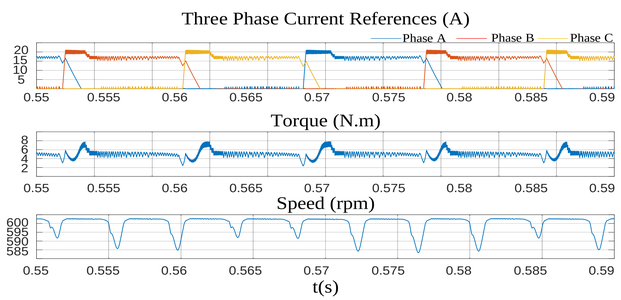

We acknowledge the support of the Ontario Research Fund: Research Excellence Program.

We acknowledge the support of the Natural Sciences and Engineering Council of Canada (NSERC), which invests annually over $1 billion in people, discovery and innovation.